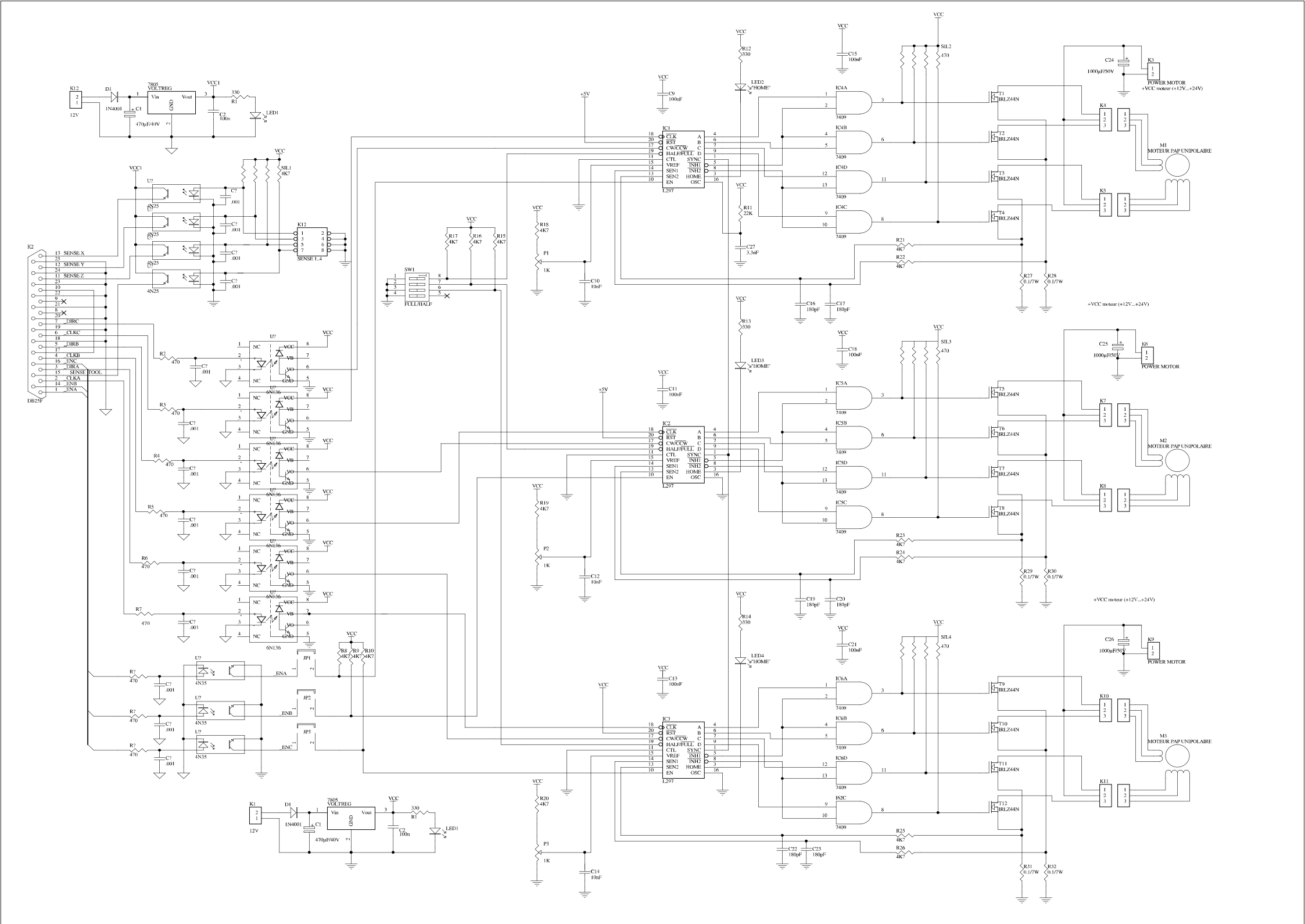

K12
12V
D1
1N4001
C1
470µF/40V
7805
VOLTREG
Vin
Vout
GND
VCC1
C2
100n
R1
330
LED1
K2
DB25F
SENSE X
SENSE Y
SENSE Z
_DIRC
_CLKC
_DIRB
_CLKB
_ENC
_DIRA
SENSE TOOL
CLKA
_ENB
_ENA
U?
4N25
C?
.001
SIL1
4K7
K12
SENSE 1..4
R2
R3
R4
R5
R6
R7
470
6N136
NC
VCC
VB
VO
JP1
JP2
JP3
R8
R9
R10
4K7
K1
12V
D1
1N4001
C1
470µF/40V
7805
VOLTREG
Vin
Vout
GND
VCC
C2
100n
R1
330
LED1
SW1
FULL/HALF
R17
R16
R15
4K7
R18
4K7
P1
1K
C10
10nF
+5V
C9
100nF
IC1
L297
CLK
RST
CW/CCW
HALF/FULL
CTL
VREF
SEN1
SEN2
EN
SYNC
INH1
INH2
HOME
OSC
R12
330
LED2
"HOME"
R11
22K
C27
3.3nF
C15
100nF
IC4A
IC4B
IC4D
IC4C
7409
SIL2
470
C24
1000µF/50V
K3
POWER MOTOR
+VCC moteur (+12V...+24V)
K4
K5
M1
MOTEUR PAP UNIPOLAIRE
T1
T2
T3
T4
IRLZ44N
R21
4K7
R22
4K7
R27
0.1/7W
R28
0.1/7W
C16
180pF
C17
180pF
+VCC moteur (+12V...+24V)
R13
330
LED3
"HOME"
C11
100nF
IC2
L297
C18
100nF
IC5A
IC5B
IC5D
IC5C
SIL3
470
C25
1000µF/50V
K6
POWER MOTOR
K7
K8
M2
MOTEUR PAP UNIPOLAIRE
T5
T6
T7
T8
R23
4K7
R24
4K7
R29
0.1/7W
R30
0.1/7W
C19
180pF
C20
180pF
+VCC moteur (+12V...+24V)
R14
330
LED4
"HOME"
C13
100nF
IC3
L297
C21
100nF
IC6A
IC6B
IC6D
I62C
SIL4
470
C26
1000µF/50V
K9
POWER MOTOR
K10
K11
M3
MOTEUR PAP UNIPOLAIRE
T9
T10
T11
T12
R25
4K7
R26
4K7
R31
0.1/7W
R32
0.1/7W
C22
180pF
C23
180pF
R20
4K7
P3
1K
C14
10nF