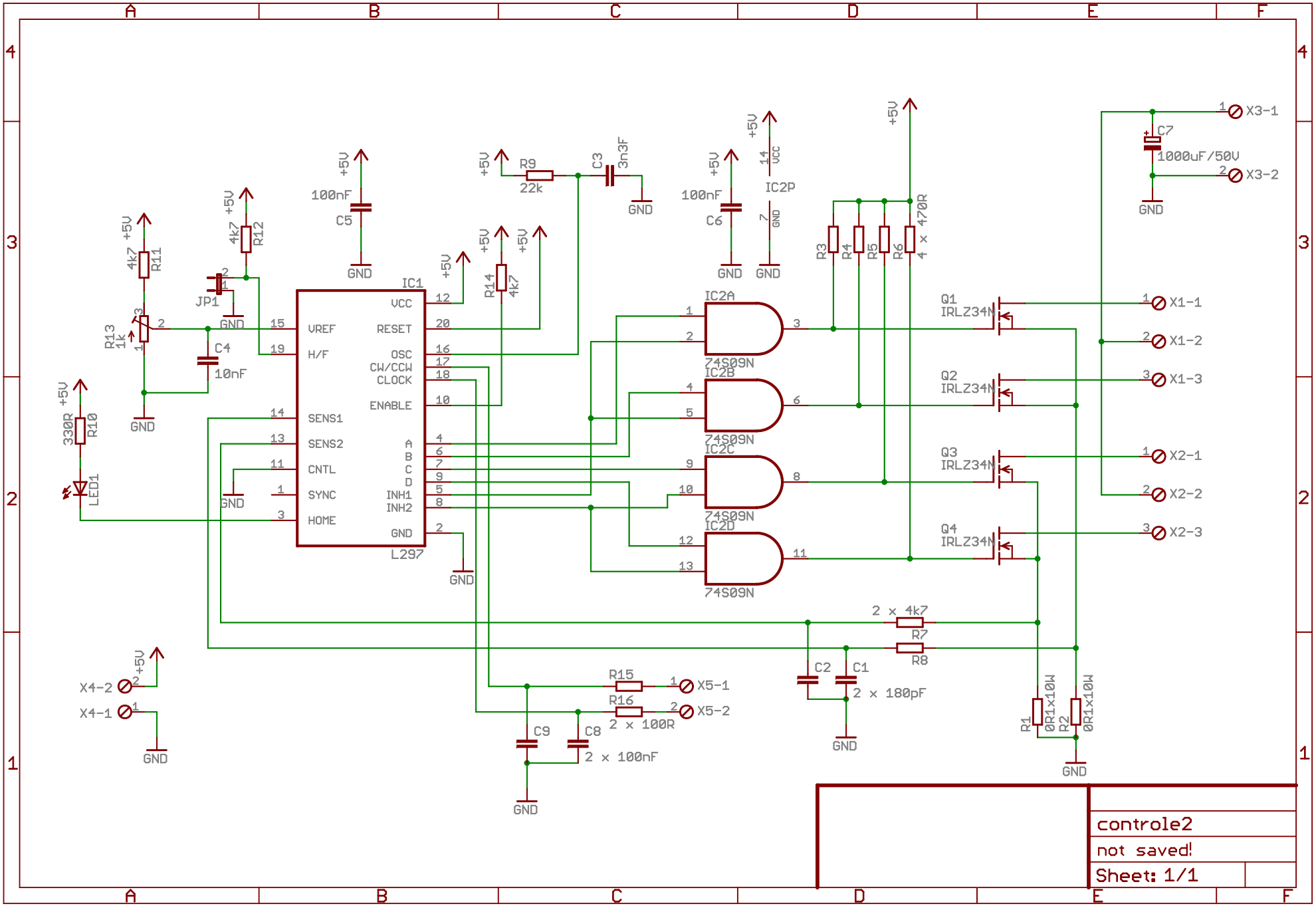
IC1
L297
VCC
VREF
RESET
H/F
OSC
CW/CCW
CLOCK
ENABLE
SENS1
SENS2
CNTL
SYNC
HOME
INH1
INH2
GND
IC2A
IC2B
IC2C
IC2D
74S09N
IC2P
VCC
GND
Q1
Q2
Q3
Q4
IRLZ34N
R1
R2
0R1x10W
R3
R4
R5
R6
4 x 470R
R7
R8
2 x 4k7
C1
C2
2 x 180pF
C3
3n3F
C4
10nF
C5
C6
100nF
C7
1000uF/50V
C8
C9
2 x 100nF
R9
22k
R10
330R
R11
4k7
R12
4k7
R13
1k
R14
4k7
R15
R16
2 x 100R
JP1
LED1
X1-1
X1-2
X1-3
X2-1
X2-2
X2-3
X3-1
X3-2
X4-1
X4-2
X5-1
X5-2
+5V
controle2
not saved!
Sheet: 1/1