chapa 1/2"

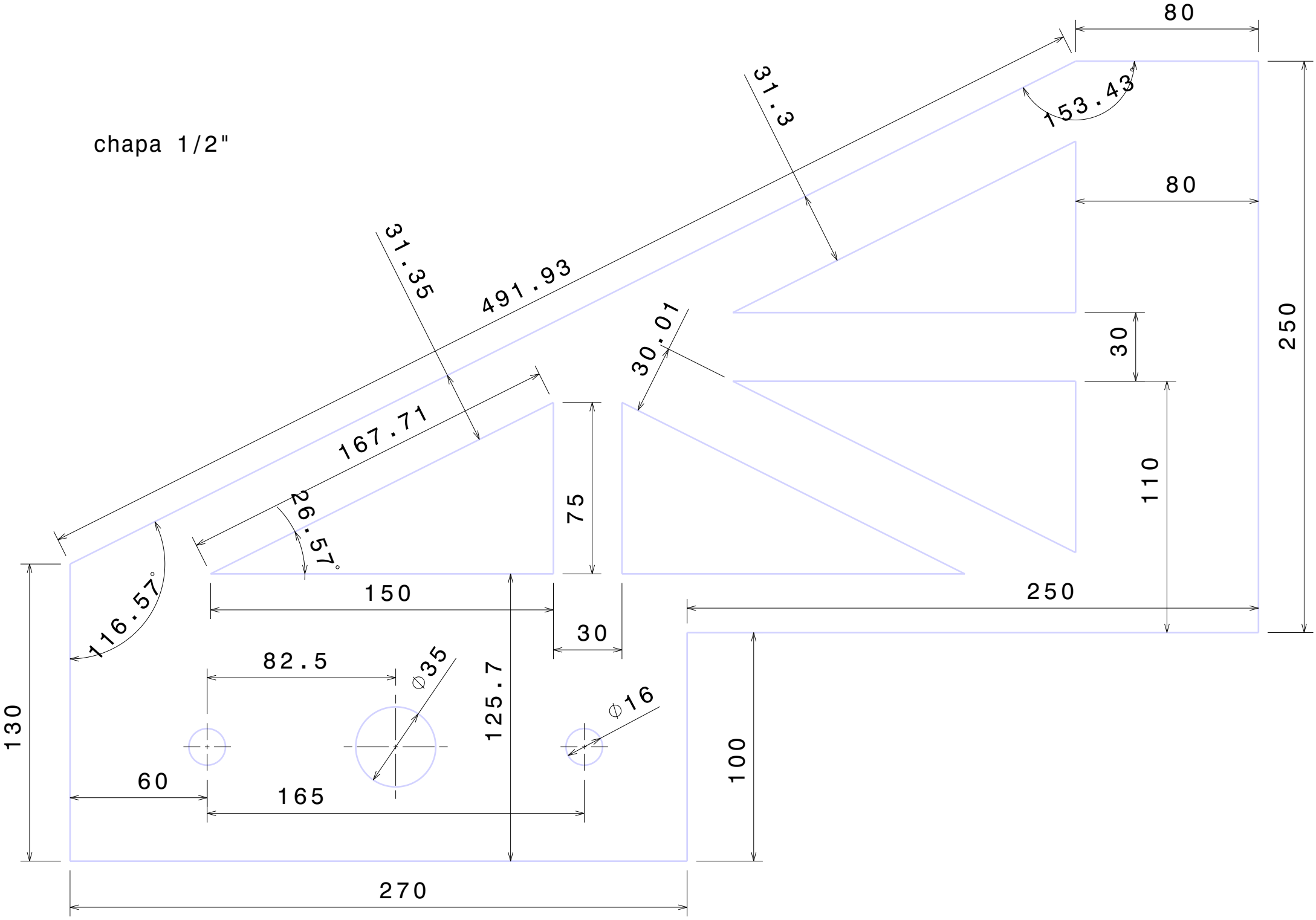
80
31.3
153.43°
80
31.35
491.93
30.01
30
250
167.71
110
26.57°
75
116.57°
150
250
30
82.5
∅35
125.7
∅16
130
100
60
165
270